

SELECTABLE COLOR TEMPERATURE TONE-SELECT™

LMRT10 COMMERCIAL DUTY • 3YR
5.5W LED TONE-SELECT™ MR16 LAMP
REFLECTOR (NARROW FLOOD)

FEATURES
The LED TONE-SELECT™ MR16 lamp offers the flexibility to select the ideal color temperature for any application while delivering bright, energy efficient lighting, excellent color rendering, and long-lasting performance..

- Selectable CCT: Choose from three color temperature options.
- Ideal replacement for traditional 50W MR16 halogen lamps.

APPLICATION
Commercial and residential applications including track lighting, recessed fixtures, display lighting, accent lighting, and landscape applications.

MEBULBS SINCE 1974

PERFORMANCE DATA

ELECTRICAL	
Wattage	5.5W
Voltage	120V
Current	70mA

LIGHTING PERFORMANCE	
Lumens	500
Lumens Per Watt (Lm/W)	91
Color Temperature (CCT)	3000K/4000K/5000K
Color Rendering (CRI)	90
Beam Angle	40°
Dimmable Lighting Control	See Install Instructions

ENVIRONMENT	
Operating Temperature	-4° ~ 104°F
Suitable Location	Damp
IP Rating	IP20
Suitable Fixture Type	Open

LIFESPAN	
Average Life (Hours)	15,000
Warranty (Years)	**3**

CONSTRUCTION	
Housing	PC
Base	GU10
Finish	White

QUALIFICATIONS
UL CERTIFIED

Manufactured by P.Q.L., Inc. • Published lumens on LED products are approximate and may vary slightly. • Specifications are subject to change without notice.

© **MEBULBS** • 4837 Amber Valley Pkwy S STE 500 • Fargo ND, 58104 • 1-800-MEBULBS

Specifications are subject to change without notice. Photos and line drawings may not be to scale and are for general reference only.
REV. 11-24-26

LMRT10 COMMERCIAL DUTY • 3YR
5.5W LED TONE-SELECT™ MR16 LAMP

MEBULBS SINCE 1974

ITEM INFORMATION

DIMENSIONS (Inches)	
Width/Diameter (MOD)	2.0"
Height	2.1"
Net Weight (Lbs)	--

PACKAGING	
Master Case	100
Dimensions	10.6" x 10.6" x 10.2"
Country of Origin	China
HS Tariff	8539.52.00.40

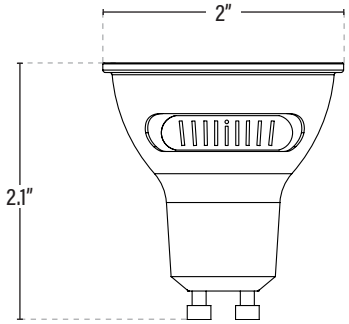

ORDERING

ITEM#	DESCRIPTION	CASE
LMRT10	5.5W MR16/30-40-50K/GU10/120V	100

Manufactured by P.Q.L., Inc. - Manufacturer Model # MR1663CGU101

© **MEBULBS** • 4837 Amber Valley Pkwy S STE 500 • Fargo ND, 58104 • 1-800-MEBULBS

Specifications are subject to change without notice. Photos and line drawings may not be to scale and are for general reference only.
REV. 11-24-26