

LRMX12 COMMERCIAL DUTY • 5YR
LED 360° DIRECT WIRE DOWNLIGHT
MOGUL BASE REPLACEMENT LAMP FOR CFL

FEATURES

The LED SPEC-SELECT™ high wattage 360° lamp is a versatile, customizable lighting with selectable wattage and CCT. Its omnidirectional design provides broad, uniform light distribution for efficient retrofit applications.

- Field-adjustable wattage & CCT
- 360° optical design for even light distribution
- Surge protection
- Heat sink for increased cooling airflow

APPLICATION

Commercial and industrial applications, these replacement lamps are ideal for top-post fixtures, high bays, parking lots, and street lighting, providing versatile lighting across a variety of spaces.

MEBULBS SINCE 1974

PERFORMANCE DATA

ELECTRICAL	
Wattage	80-100-120W
Voltage	120-277V
Surge Protection	Built-In
Power Factor	0.9
Total Harmonic Distortion (THD)	20%

LIGHTING PERFORMANCE	
Lumens	12000/15000/18000
Lumens Per Watt (Lm/W)	150
Color Temperature (CCT)	3000K/4000K/5000K
Color Rendering (CRI)	80
Beam Angle	130°
Light Distribution	--
BUG Rating (Backlight, Uplight, and Glare)	--
Dimmable Lighting Control	See Install Instructions

ENVIRONMENT	
Operating Temperature	-40° ~ 122°F
Suitable Location	Damp
IP Rating	IP64
Suitable Fixture Type	Enclosed

LIFESPAN	
Average Life (Hours)	50,000
Warranty (Years)	**5**

CONSTRUCTION	
Housing	Aluminum / PC
Lens	Clear
Base	E39 - Mogul
Finish	White

QUALIFICATIONS

UL CERTIFIED

Manufactured by P.Q.L., Inc. • Published lumens on LED products are approximate and may vary slightly. • Specifications are subject to change without notice.

© **MEBULBS** • 4837 Amber Valley Pkwy S STE 500 • Fargo ND, 58104 • 1-800-MEBULBS

Specifications are subject to change without notice. Photos and line drawings may not be to scale and are for general reference only.
REV. 11-24-26

LRMX12 COMMERCIAL DUTY • 5YR
LED 360° DIRECT WIRE DOWNLIGHT

MEBULBS SINCE 1974

ITEM INFORMATION

DIMENSIONS (Inches)	
Width/Diameter (MOD)	5.1"
Height	11.1"
Net Weight (Lbs)	--

PACKAGING	
Master Case	6
Dimensions	16.5" x 11.2 x 13.2"
Country of Origin	China
HS Tariff	8539.52.00.91

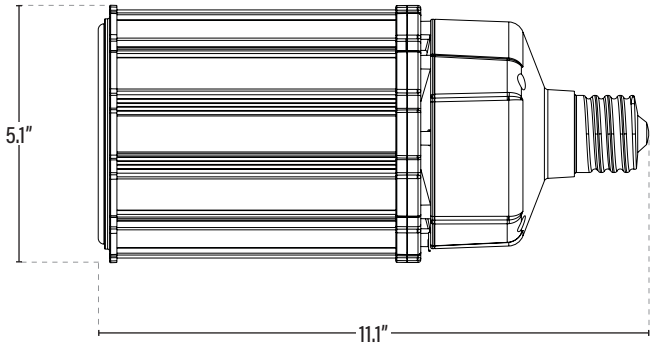

ORDERING

ITEM#	DESCRIPTION	CASE
LRMX12	80-100-120W/T27/30-40-50K/MOG	6

Manufactured by P.Q.L., Inc. - Manufacturer Model # HW360PI203CMG1

© **MEBULBS** • 4837 Amber Valley Pkwy S STE 500 • Fargo ND, 58104 • 1-800-MEBULBS

Specifications are subject to change without notice. Photos and line drawings may not be to scale and are for general reference only.
REV. 11-24-26